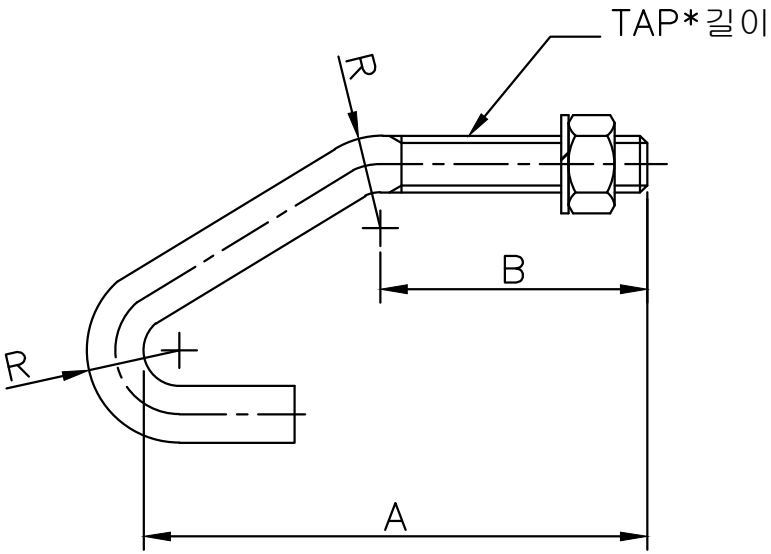

RAIL ANCHOR

NO.	NOTATION / ACN SIZE	A	B	TAP 길이 (5/8-11 UNC)
1	H-150	125	66	60
2	H-175	150	75	65
3	H-200	155	80	65
4	H-250	175	85	70
5	H-300	200	105	85
6	H-400	230	120	95

NO.	DATE	REVISION	NO.	DATE	REVISION
1			1		
2			2		
3			3		

NOTE

제작사 JIN DO MACHINERY CO.

DROWN BY		
DESIGNED BY	곽재현	
CHECKED BY	신덕재	
APPROVED BY		

SUBJECT 낚시 ANCHOR

PROJECT

SCALE N/S

DATE 2013. 10.

PROJECT NO.

DRAWING NO. 0A